Max Load: 50 Kgs

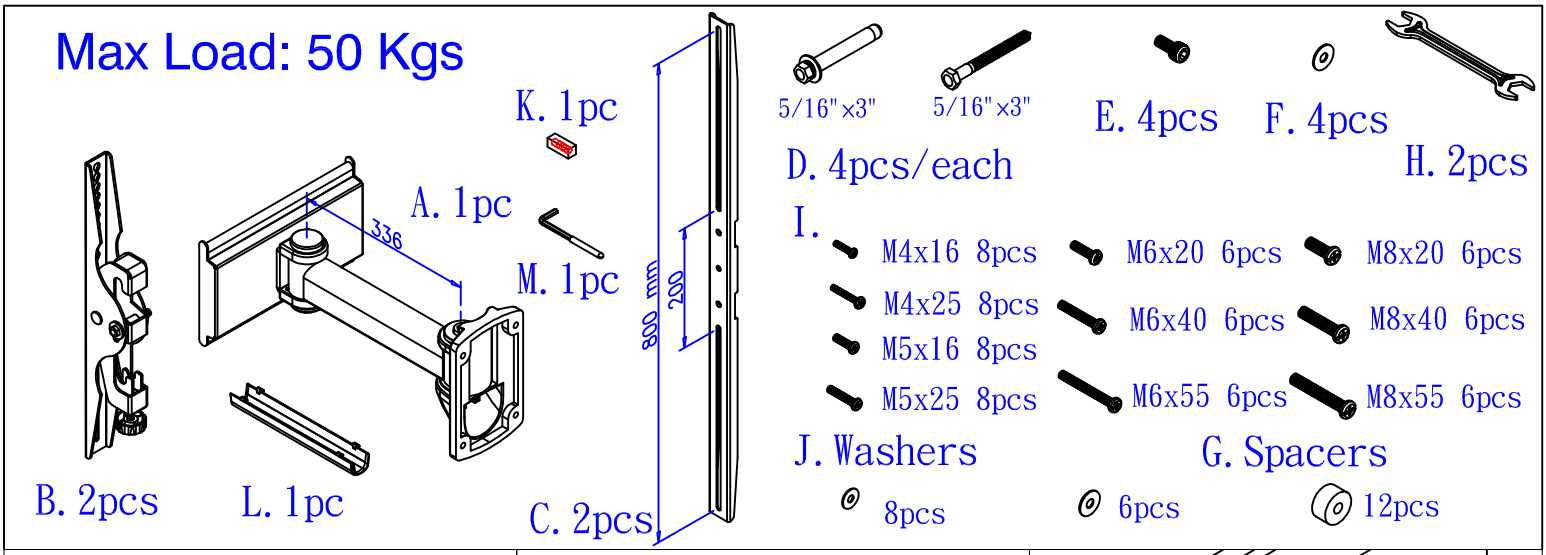

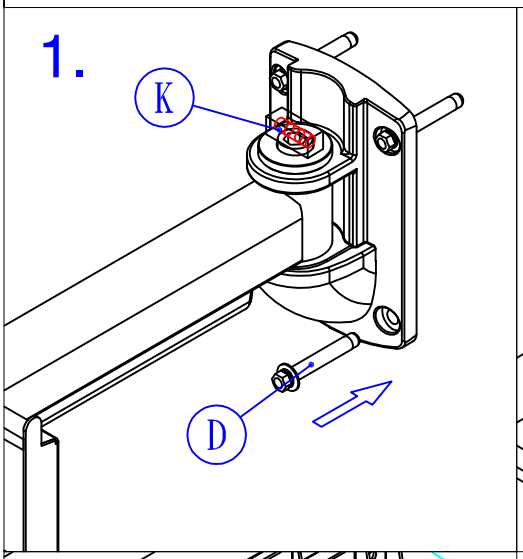

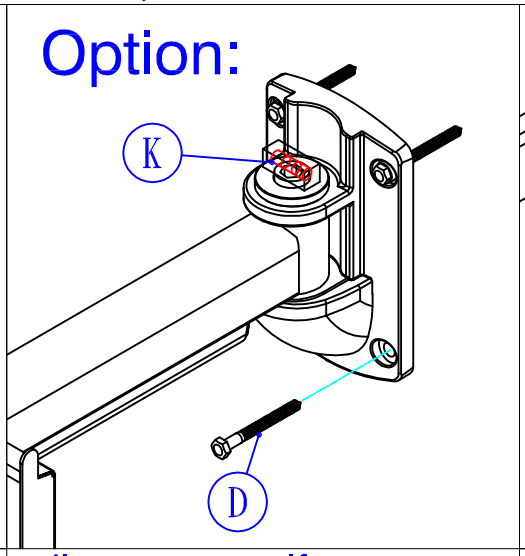

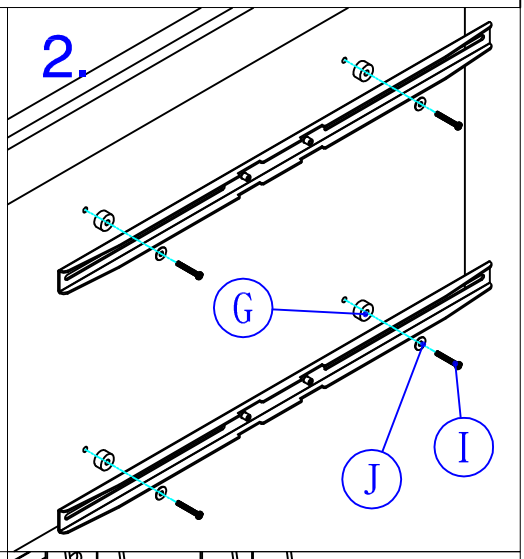

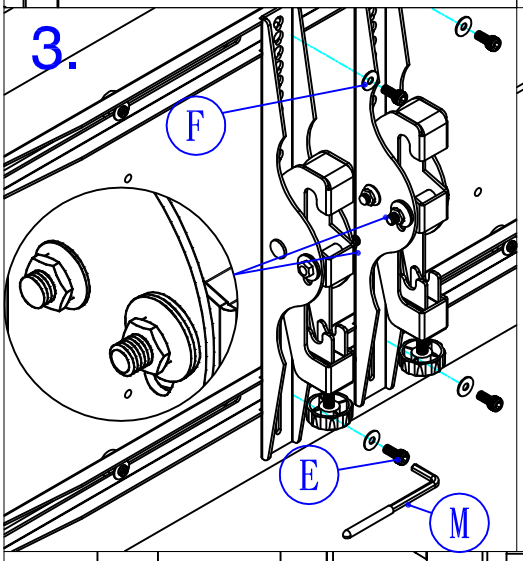

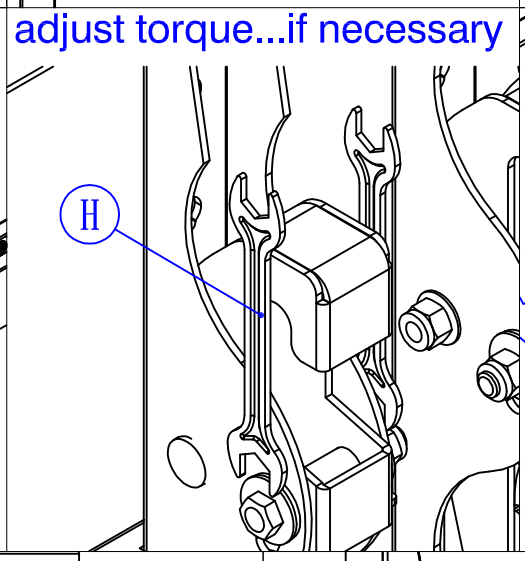

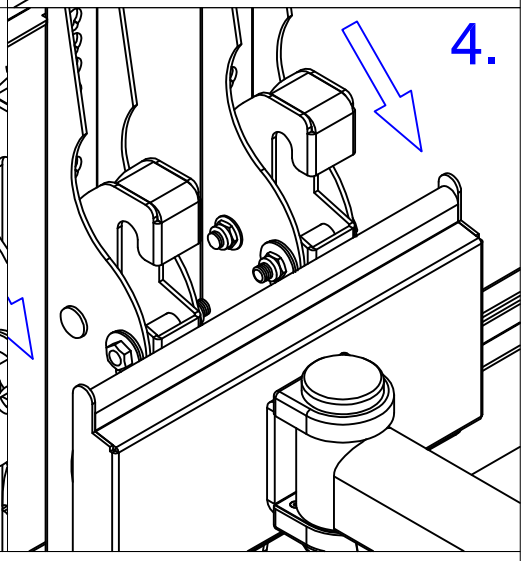

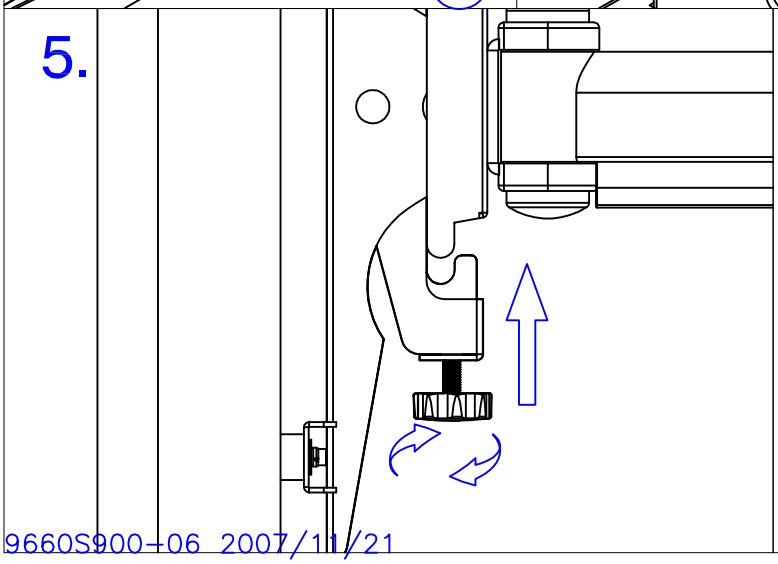

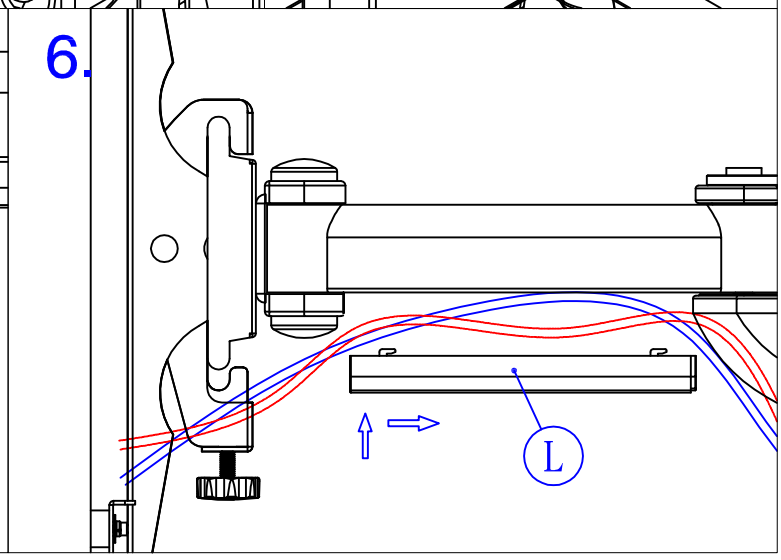

9660S900-06 2007/11/21